Electronic Service Manuals

This electronic document is provided as a service to our customers. We do not create the contents of the information contained in this document. Should you have detailed questions pertaining to the information contained in this document, you may contact Michco, or the manufacturer which provided the original information in this electronic deliverable. Michco's only part in this electronic deliverable was the electronic assembly process. By providing this manual online we are not guaranteeing parts availability.

You may contact Michco through the following methods:

Phone (517) 484-9312

2011 N. High St. -- Lansing, Michigan -- 48906

Fax: (517) 484-9836

Email: CustomerService@Michco.com

Website: www.Michco.Com

Order Parts online at:

www.Michco.Com

Directly to Parts & Service:

By Email: **CustomerService@Michco.com**

By Fax: (517) 484-9836

By Voice: (517) 484-9312

Serving the Cleaning Industry Since 1922

Notice: All copyrighted material remains property of original owners, all trademarks are property of respective owners. Manuals are subject to Manufacturer's reproduction limitations. Originals or reproductions were provided by manufacturers through a request. We make no warranty as to the correctness of information provided in this document and you assume all risk. By placing these manuals on line we are not declaring our corporation to be an manufacturer authorized dealer or provider, please check our web site for authorized manufacturers we represent.

SATURN

20HS1500-SS, 20HS1500-BK
20HS2000-SS, 20HS2000-BK
17HS2000F-SS, 17HS2000F-BK
INCLUDES "-220V" VERSIONS

HIGH SPEED FLOOR MACHINE

OWNER'S/OPERATOR'S MANUAL

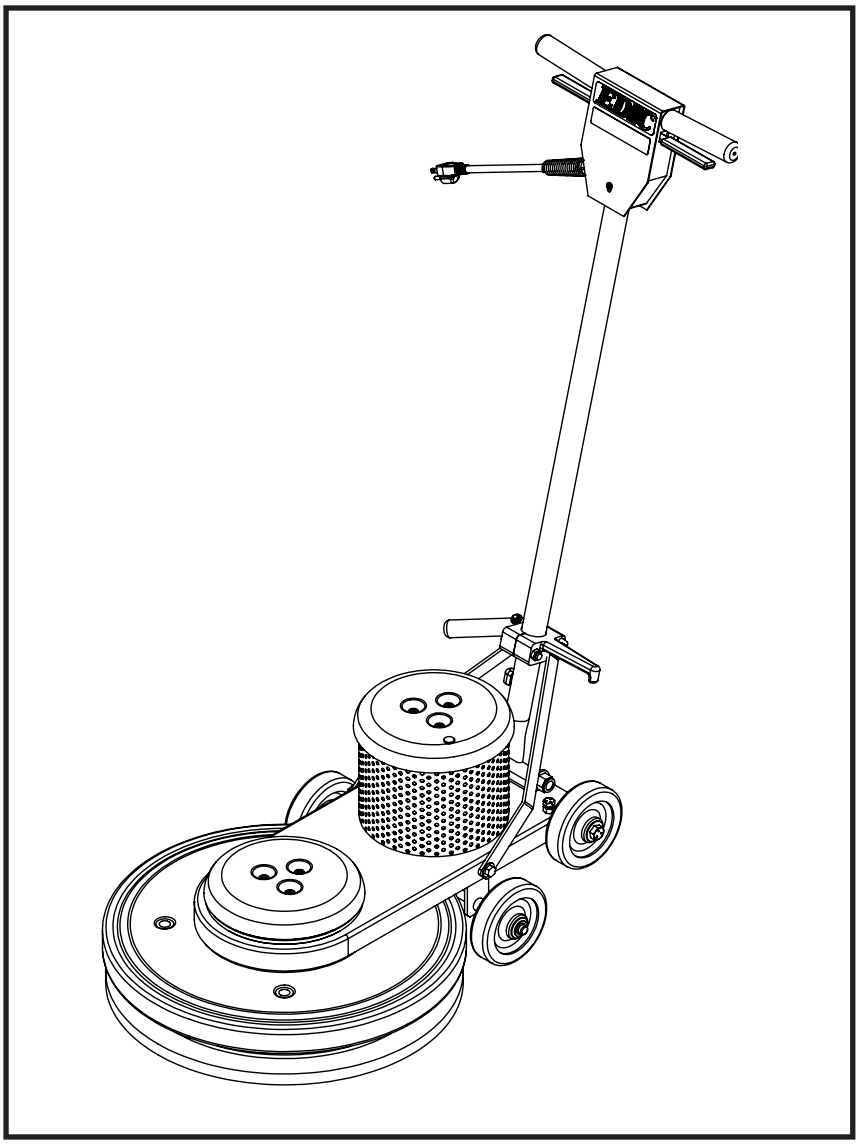

EDIC

WWW.EDIC-USA.COM

2-19-2018

TABLE OF CONTENTS

RECEIVING YOUR EQUIPMENT.....3
WARNINGS AND SAFETY..... 3-4
ELECTRICAL INFORMATION..... 4
GROUNDING INSTRUCTIONS.....4
MAINTENANCE.....5
CORD SAFETY AND STORAGE..... 5
CLEANUP AND STORAGE..... 5
MAINTENANCE, CLEANUP, STORAGE..... 5
PAD INSTALLATION..... 5
MACHINE OPERATION..... 6
MANEUVERING THE MACHINE..... 6
DRIVE BELT AND HANDLE LOCK ADJUSTMENTS..... 7
SERVICING..... 7
17HS2000-SS/BK BREAKDOWN AND PARTS LIST..... 8-9
HANDLE BREAKDOWN AND PARTS LIST NON FOLDING MODELS..... 10-11
20HS2000-SS/BK BASE ASSEMBLY BREAKDOWN AND PARTS LIST..... 12-13
20HS1500-SS/BK BASE ASSEMBLY BREAKDOWN AND PARTS LIST..... 14-15
WIRING FOR ALL HIGH SPEED MODELS..... 16

NOTE:
BREAKDOWNS FOR THE MOST COMMON SATURN VERSIONS HAVE BEEN INCLUDED.
IF YOURS IS NOT LISTED, CONTACT EDIC FOR ASSISTANCE.

RECEIVING YOUR NEW SATURN:

When your package is delivered, check all cartons carefully for signs of rough handling. If your SATURN is damaged, notify the carrier immediately and request an inspection. Be sure to keep all cartons, packing inserts, packing lists and carrier's receipt until the inspector has verified your claim.

EDIC's liability ceases when the carrier picks up the shipment. However, our customer service staff will be happy to furnish any information needed in connection with the claim and will attempt to expedite a resolution.

PLEASE READ BEFORE OPERATING YOUR NEW SATURN:

Read the manual carefully and completely before attempting to operate the unit. This manual has important information for the use and safe operation of the machine. Keep this manual handy at all times.

This equipment has been engineered and manufactured to provide excellent performance and service. To ensure that your equipment will continue to perform as intended:

- Maintain equipment regularly- following the suggested maintenance schedule provided.
- Use only original EDIC parts when servicing.
- Operate equipment with care.

If additional information is needed, please contact:
EDIC 800-338-3342

All information and specifications printed in the manual are current at the time of printing; however because of EDIC's policy of continual product development, we reserve the right to make changes at any time without notice.

FAILURE TO COMPLY WITH THE FOLLOWING WARNINGS AND INSTRUCTIONS WILL VOID THE WARRANTY.

WARNING!

- Do not operate the machine unless trained and authorized.
- Do not allow children or untrained adults to operate this machine.
- Do not leave the machine when plugged in. Unplug from the outlet when not in use, before servicing, and when changing the brushes or pads.
- Use indoors only.
- Do not allow to be used as a toy. Close attention is necessary when used by or near children.
- Do not bypass or defeat the safety "lock-out lever."
- The machine was designed for use as per instruction and recommendations written in this manual.
- Any deviation from its proper use or purpose and the consequential damage that may occur is the sole responsibility of the end user.
- Do not use with damaged cord or plug. If the machine is not working as it should, or it has been dropped, damaged, left outdoors or dropped into water, return it to an authorized service center.
- Do not pull or carry by cord, use cord as handle, close a door on the cord or pull cord around sharp edges or corners. Do not run machine over cord. Keep cord away from heated surfaces.
- Do not unplug by pulling on cord. To unplug, grasp the plug, not the cord.
- Do not handle plug or appliance with wet hands.
- Make sure the machine is plugged into an electrical outlet with the same voltage and frequency rating as shown on the nameplate of the machine. Do not attempt to plug a 115- volt machine into a 230- volt outlet.
- Do not immerse or use this machine in standing water. Such use can cause electric shock.
- Keep the electrical supply cord from contacting the rotating brush or drive block.
- Do not expose machine to freezing temperatures.
- To avoid electric shock, do not expose the unit to rain. Store indoors only.

- Connect to a properly grounded outlet only. See "Grounding Instructions."
- Turn off all controls before unplugging.
- When using an extension cord, use a 3 conductor grounding cord, 12 gauge wire or heavier.
- Do not put any object into openings. Do not use with any opening blocked. Keep free of dust, lint,
- hair and anything that may reduce air flow.
- Do not operate machine in flammable or explosive areas.
- All servicing of EDIC's equipment should be performed by a EDIC authorized service center.
- Keep hair, loose clothing, fingers and all parts of body away from openings and moving parts.
- Use extra care when cleaning near stairs.
- To reduce the risk of fire use only commercially available floor cleaners and waxes intended for machine application.
- Risk of explosion - Electrical motors and components can cause an explosion when operated near volatile materials and vapors. Do not use this machine near flammable materials such as solvents, thinners, fuels, grain dust, etc.

ELECTRICAL - 115 Volt

Model: ALL LISTED ON COVER WITHOUT "-220V"

This machine is designed to operate on a standard 15 amp, 120 volt, 60 Hz, AC circuit. Voltages below 105 volt AC or above 125 volts AC could cause serious damage to the motor.

ELECTRICAL - 240 Volt

Model: ANY MACHINES WITH A "-220V" AT THE END OF MODEL NUMBER

This machine is designed to operate on a standard 8.3 amp type L fused 230 volt, 50 Hz, AC circuit. Voltages below 200 volt AC or above 250 volts AC could cause serious damage to the motor.

GROUNDING INSTRUCTIONS:

This piece of equipment must be grounded. Should an electrical malfunction occur, grounding provides a path of least resistance for electrical current- reducing the risk of electric shock. This piece of equipment is furnished with a cord that has a grounding conductor and grounding plug. The grounded plug must only be plugged into an appropriate outlet that is properly installed and grounded in accordance with all local codes and ordinances.

WARNING:

Connecting the equipment to an improperly grounded outlet can result in an increased risk of electric shock. A qualified electrician should be consulted if you are unsure that the outlet is properly grounded. Do not modify the plug provided with the equipment. If it will not fit the outlet, have a proper outlet installed by a qualified electrician.

This appliance is designed for use on a 120-volt circuit. The grounding plug provided looks like the plug illustrated in Figure 1. Replace the power cord if the grounding pin is damaged or broken.

Extension cords connected to this machine should be 12 gauge, three-wire cords with three-prong plugs and outlets. DO NOT use extension cords more than 25 feet (7.6 m) long

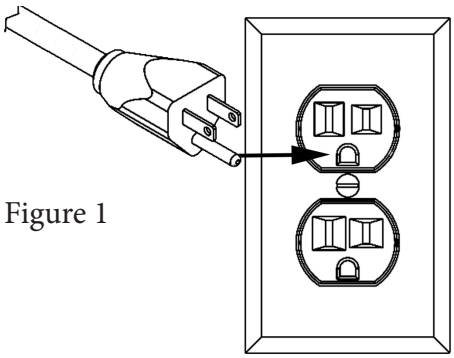

Figure 1

.

CORD SAFETY

- Do not leave appliance when plugged in. Unplug from outlet when not in use and before servicing
- Do not use with damaged cord or plug. If appliance is not working as it should, has been dropped, damaged, left outdoors, or dropped into water, return to service center for inspection and repair.
- Do not pull or carry by cord, use cord as handle, close a door on cord, or pull cord around sharp edges or corners. Do not run this SATURN over the cord. Keep cord away from heated surfaces.
- Do not unplug by pulling cord. To unplug, grasp the plug, not the cord.
- Do not handle plug or appliance with wet hands.
- Always unplug the machine when removing brush.
- This equipment should be stored indoors and not exposed to rain.

CORD STORAGE:

While not in use, storage can be accomplished by winding cord around handle assy. Cord should be completely unwound during operation.

MAINTENANCE:

This SATURN has been engineered and built to require minimum maintenance. But like any machine, it does require some care to keep it in optimum working condition. Careful attention to these maintenance instructions will give you maximum operating performance and life expectancy of the machine.

CAUTION: Disconnect the power cord from the outlet before doing any clean up or maintenance on the machine

1. Keep the machine clean. Do not allow dust to accumulate on external surfaces, the motor, or near any moving parts.
2. After every job, wipe down the surface of the machine with a clean damp cloth.
3. Inspect cord for damage. Do not use machine with a damaged cord.

CLEAN UP & STORAGE

1. Unplug and wrap it under the cord hook and around the left side handle grip. Clean the cord and inspect it for cuts, gashes and loose prongs.
2. Wipe down the machine and store in clean dry place.
3. To prevent deformation of pad and pad driver, remove them before storing.

WARNING: Do not store the machine with the drive block, pad driver or brush on the machine.

PAD INSTALLATION:

1. To install pad, tilt the machine back on the rear wheels until machine is resting on handle.
2. Center the pad on the pad holder and insert pad center lock. Twist clockwise to lock. Make sure the center lock is tight.

To remove: Twist the center lock counterclockwise

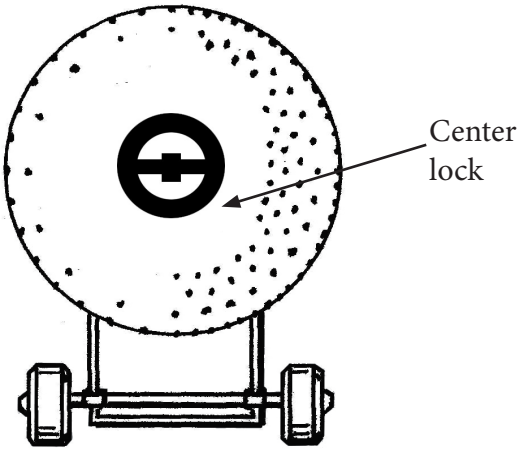

3. Use the appropriate pads for the floor condition and surface. Lighter pads are less abrasive and darker pads are more abrasive. The correct pad will give you the best results. Consult your local distributor for recommendations.
4. Do not use pads that are larger than 20” in diameter.

MACHINE ON/OFF OPERATION:

This equipment is equipped with a safety "LOCK OUT" lever. Refer to Diagram 1 for steps 5, 6, and 7.

1. Install the pad driver and pad or attachment.
2. Plug in machine.
3. Lean the machine back, with all four wheels on the floor, so the pad is not making contact with the floor when you turn the motor on.
4. Place both hands on the handle grips with your fingers around the ON/OFF lever (Refer to B on Diagram 1) Which extends from one side to the other, underneath the handle grips.
5. The safety "LOCK OUT" lever (Refer to A on Diagram 1) is located underneath the right side handle grip and switch lever. To unlock the "LOCK OUT" lever, use your right hand fore finger to press the lever toward the back of the switch box.
6. With "LOCK OUT" lever in the unlocked position, pull up on either side of the ON/OFF lever (Refer to B on Diagram 1) to power the motor. Pull up on only one side of the ON/OFF lever.
7. Wait 5 seconds for the motor to reach full speed and place pad on the floor.

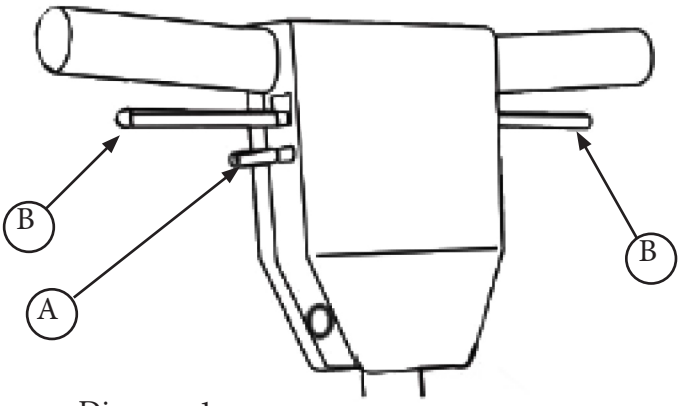

Diagram 1

TO MANEUVER THE MACHINE:

CAUTION:
THIS MACHINE CANNOT BE OPERATED WITH THE HANDLE IN THE UPRIGHT POSITION. DOING SO WILL CAUSE LOSS OF CONTROL AND POSSIBLE INJURY.

1. Lower the handle to a comfortable height for the operator. This machine should operate with the handle unlocked at about waist level. Do not lock the handle into a fixed position.
2. It is best that the operator begin operation closest to the power outlet and move outward as far as the power cord will permit, then, work back to the original point.
3. Move the machine in forward and reverse. Do not swing side to side.
4. To stop the machine, simply release ON/OFF levers.
5. Do not use on wet floors.

TO ADJUST A DRIVE BELT

1. Loosen, but do not remove the 4 bolts, that hold the motor to the frame.
2. Tighten the 2 screws at the back of the frame until the belt is tight.
3. Test and re-adjust the belt until the belt does not slip. Re-tighten the four motor bolts.

WARNING: DO NOT OVER-TIGHTEN THE BELT

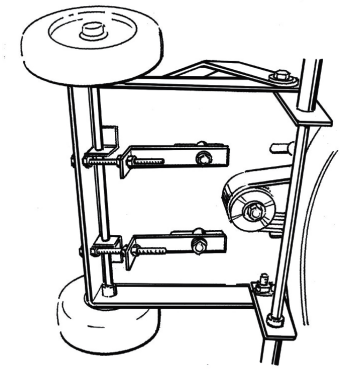

TO ADJUST THE HANDLE-LOCK MECHANISM:

1. Unlock the handle and place it in the upright position.
2. Tighten the adjusting nut until there is just a slight drag when the handle is raised or lowered. Do not overtighten.
3. Place the handle grip into the down (locked) position to check for proper locking function.

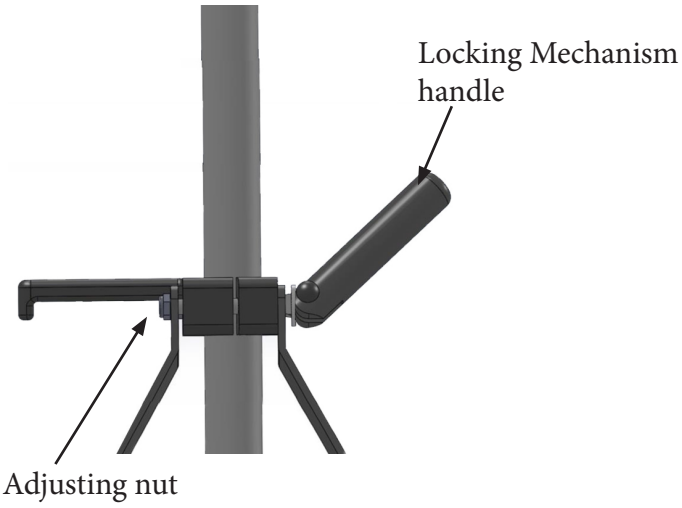

SERVICING:

In the event that your SATURN requires service, please contact EDIC:
800-338-3342

No user serviceable components are employed in this equipment. Do not attempt repairs yourself. EDIC will assist you in locating an indepedent service contractor.

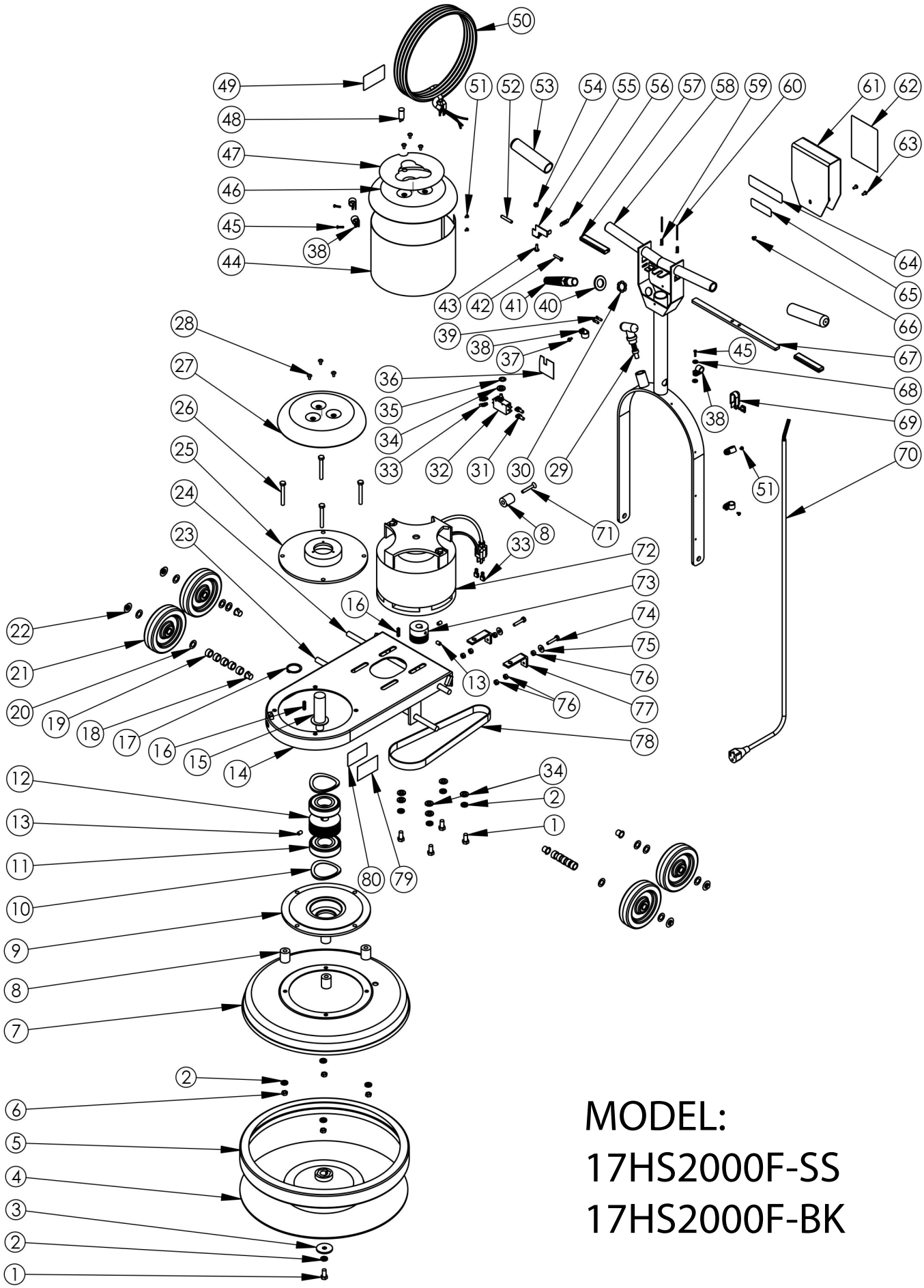

MODEL:
17HS2000F-SS
17HS2000F-BK

MODEL: 17HS2000F-SS, 17HS2000F-BK

ITEM NO.	PART NUMBER FOR 17HS2000F-SS	PART NUMBER FOR 17HS2000-BK, IF DIFFERENT	QTY.
1	C11571 Hex Tap Bolt, 3-8 X .75 in		5
2	C00250 Lockwasher, .375, Split		9
3	D11535 Washer, 1.75 in, Steel		1
4	1704BR Pad holder, 17 in, High Speed		1
5	E11477 Bumper, 17 in Floor Machine		1
6	C00262 Nut, .31-18, Hex		4
7	D11485-SS Brush Cover, 17 in, Stainless	D11485B BRUSHCOVER, BLACK	1
8	K11521 Spacer, Base, Floor Machine		5
9	D11565 Bearing Plate, Lower		1
10	C11556 Wave Washer		2
11	G11531 Bearing		2
12	D11533 Pulley, 3.125 in w- Grooves		1
13	C11567 Set Screw, .312 in		3
14	D11747 Motor Frame, Floor Machine		1
15	D11534 Shaft, 4.11 in		1
16	C11555 Key, Motor, .187 in		2
17	C11574 Retaining Ring		1
18	K00674 Bushing, .50 in, Nylon		4
19	A10600 Bushing, PVC, .750 X .375		10
20	C11559 Washer, .515 X .875 X .032		10
21	G11943 Wheel, 5 in Saturn		4
22	C02305 Cap Nut, .5in Push-on		4
23	D11732 Axle, .50 X 17.19		1
24	D11731 Axle, .50 X 14.5		1
25	D11566 Bearing Plate, Upper		1
26	C11568 Hex Bolt, .31- 18 X 2.5 in		4
27	D11490C Drip Cover, Chrome	D11490B DRIP COVER, BLACK	1
28	C11916 Screw, 10-32 X .375 Phillips		6
29	D11733 Handle Lock, Spring Loaded		1
30	B11505 Strain Relief Nut, Metal		1
31	B11762 Terminal Lug, Nylon, Female		2
32	B11465 Switch, DPST, Pushbutton		1
33	B00177 Terminal Lug, Female, QD, .25 X .032		4
34	C00252 Washer, .375 in, Flat		7
35	C11541 Washer, .375 in, Star		1
36	B11518 Switch Insulation		1
37	C00284 Screw, 10-32 X .375 Ground		1
38	B00187 Cable Clamp, Nylon, .43 in.		6
39	B00180-10-3 Ring Terminal, #10 Center		2
40	C11560 Washer, .93 ID X 1.5 OD		1
41	B11504 Strain Relief, Metal		1
42	C11491 Screw, 10-32 X 1 in, SS		1
43	C90007 Screw, 10-32 X .625 Phillips, Truss Head, SS		1
44	D11545 Motor Screen		1
45	C00293 #8 X .5in Pan, Black SMS, Phillips		3
46	D11490C-H Drip Cover w - Light, Chrome	D11490B-H DRIP COVER W- LIGHT, BLACK	1
47	H11830 Label, Saturn, Drip Cover		1
48	B02196-1 Light, Motor Carbon Brush Wear		1
49	H02548-2 Label, Important, Cord		1
50	B11900 Power Cord, 12-3, 75 FT, SJTW		1
51	C00297 Screw,#8 X .25 in, Pan Head		4
52	K11519 Lever Grip, Lockout, Black		1
53	K11498 Grip		2
54	C00278 Locknut, 10-32, Nylon, SS		1
55	D11494 Lockout Bracket		1
56	D11524 Spring, Lockout		1
57	K11520 Lever Grip, Trigger, Black		2
58	D11480-1 Handle Asm., Fold Down		1
59	D11523 Spring, Trigger		2
60	C00306 Roll Pin, .125 X 1.75		2
61	D11496B Switch Box Cover, Black		1
62	H11493 Label, Safety, Floor Machine		1
63	C11529 Screw, 10-32 X .375 in		2
64	H11831 Label, EDIC, Black-Silver		1
65	H12069 Label, 2000 RPM, Saturn		1
66	C11528 Screw, 10-32 X .25 in		1
67	D11495 Trigger, Zinc Plated		1
68	C03251 Washer, .50 in, Flat		2
69	B10734 Strain Relief, Handle		1
70	B11513 Cord, Handle, 14-3 SJTW		1
71	C00287 Screw, .25-20 X 1.75 Flat		1
72	G11557 Motor, High Speed 115V, FOR 220V USE G11744		1
73	D11532 Pulley		1
74	C02310 Hex Bolt, 1-4 X 20 X 1.25 in		2
75	C00233 Washer, Flat, .25 in		2
76	C00261 Nut, .25-20, Hex		6
77	D11752 Tension Adjustment Brkt.		2
78	L11750 Belt, Fold Down HiSpeed		1
79	H03545 Cover, Serial # Label		1
80	H00565-5 Label, Serial #, Standard		1

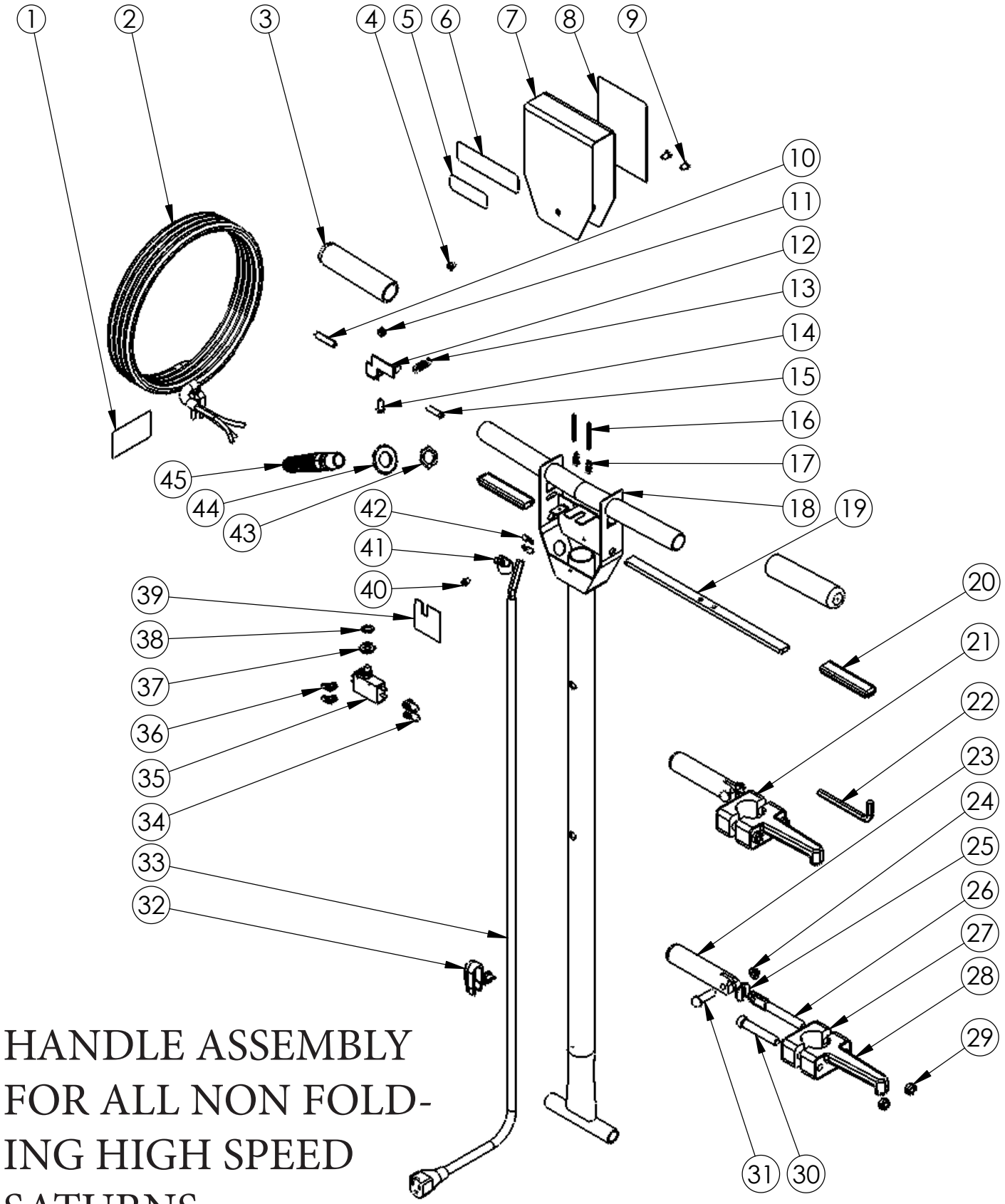

HANDLE ASSEMBLY FOR ALL NON FOLDING HIGH SPEED SATURNS

HANDLE ASSEMBLY FOR ALL NON-FOLDING HIGH SPEED SATURNS

ITEM NO.	PART NUMBER	DESCRIPTION	QTY.
1	H02548-2 Label, Important, Cord		1
2	B11900 Power Cord, 12-3, 75 FT, SJTW		1
3	K11498 Grip		2
4	C11528 Screw, 10-32 X .25 in		1
5	H12069 Label, 2000 RPM, Saturn		1
6	H11831 Label, EDIC, Black-Silver		1
7	D11496B Switch Box Cover, Black		1
8	H11493 Label, Safety, Floor Machine		1
9	C11529 Screw, 10-32 X .375 in		2
10	K11519 Lever Grip, Lockout, Black		1
11	C00278 Locknut, 10-32, Nylon, SS		1
12	D11494 Lockout Bracket		1
13	D11524 Spring, Lockout		1
14	C90007 Screw, 10-32 X .625 Phillips, Truss Head, SS		1
15	C11491 Screw, 10-32 X 1 in, SS		1
16	C00306 Roll Pin, .125 X 1.75		2
17	D11523 Spring, Trigger		2
18	D11479 Handle, Chrome, Floormachine		1
19	D11495 Trigger, Zinc Plated		1
20	K11520 Lever Grip, Trigger, Black		2
21	11507A Assembled Locking Handle, Cord Hook		1
22	C11619 Allen Wrench, .31 in		1
23	D11497 Handle, Locking Clamp		1
24	C11538 Cap Nut, .31 in, Push-On		1
25	C00259 Washer, Slotted, Zinc		1
26	C11536 Spade Bolt, .375-16 X 4 in		1
27	D11507 Cord Hook Clamp		1
28	D11507-2 Cord Hook Body		1
29	C11558 Locknut, Black Oxide, Thin		2
30	C11502 Socket Cap Screw, .375-16 X 2.5 in		1
31	C11537 Dowel Pin, .31 X 1.5 in		1
32	B10734 Strain Relief, Handle		1
33	B11513 Cord, Handle, 14-3 SJTW		1
34	B11762 Terminal Lug, Nylon, Female		2
35	B11465 Switch, DPST, Pushbutton		1
36	B00177 Terminal Lug, Female, QD, .25 X .032		2
37	C00252 Washer, .375 in, Flat		1
38	C11541 Washer, .375 in, Star		1
39	B11518 Switch Insulation		1
40	C00284 Screw, 10-32 X .375 Ground		1
41	B00187 Cable Clamp, Nylon, .43 in.		1
42	B00180-10-3 Ring Terminal, #10 Center		2
43	B11505 Strain Relief Nut, Metal		1
44	C11560 Washer, .93 ID X 1.5 OD		1
45	B11504 Strain Relief, Metal		1

BASE ASSEMBLY FOR:
20HS2000-SS
20HS2000-BK

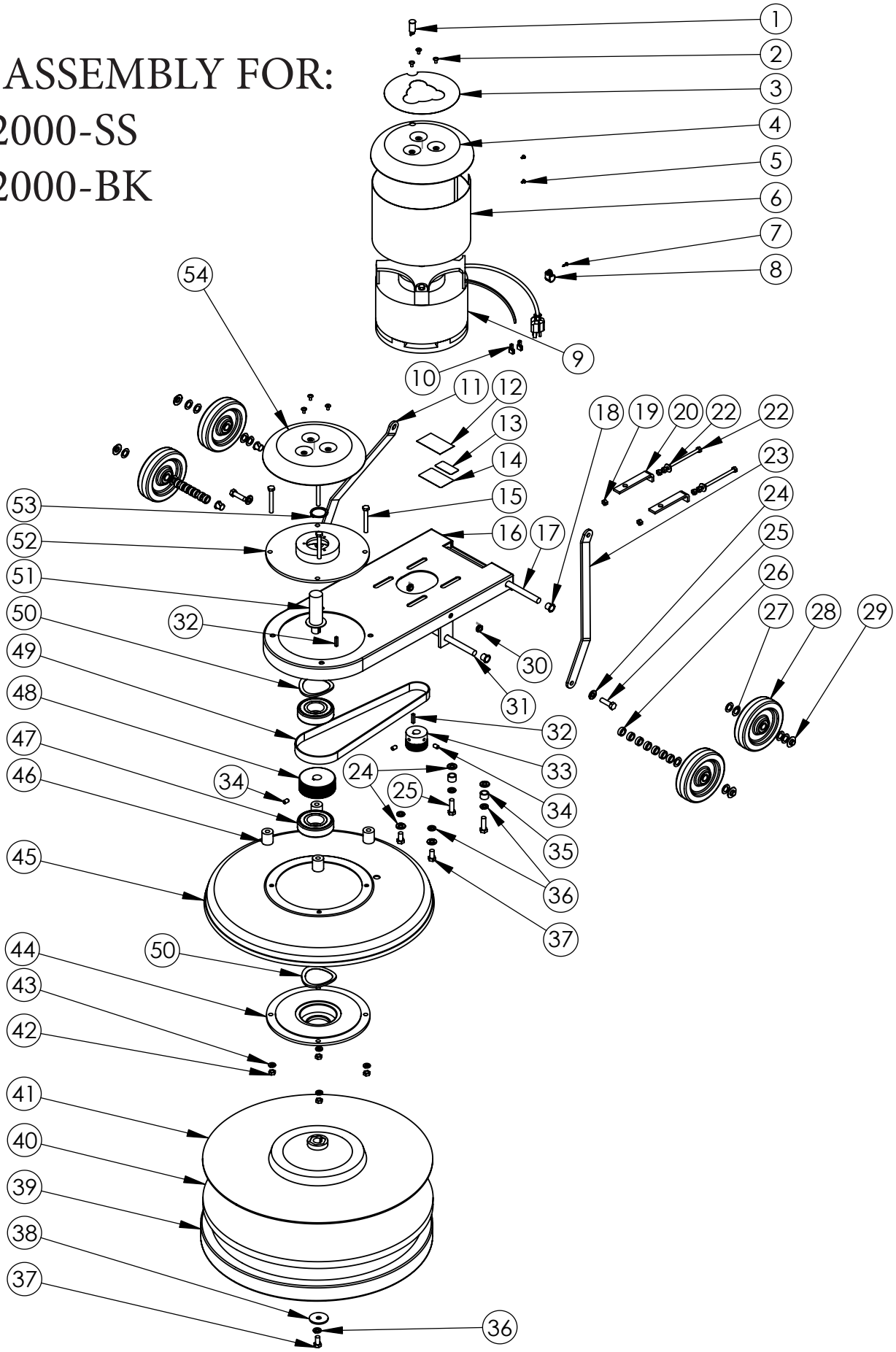

BASE ASSEMBLY FOR:
20HS2000-SS
20HS2000-BK

ITEM NO.	PART NUMBER	FOR BLACK MODEL	QTY.
1	B02196-1 Light, Motor Carbon Brush Wear		1
2	C11916 Screw, 10-32 X .375 Phillips		6
3	H11830 Label, Saturn, Drip Cover		1
4	D11490C-H Drip Cover, Chrome w-Hole for Green Light	D11490B-H BLACK	1
5	C00297 Screw,#8 X .25 in, Pan Head		2
6	D11545 Motor Screen		1
7	C00293 #8 X .5in Pan, Black SMS, Phillips		1
8	B00187 Cable Clamp, Nylon, .43 in.		1
9	G11557 Motor, High Speed 115V, FOR 220V USE G11744		1
10	B00177 Terminal Lug, Female, QD, .25 X .032, 16-14 AWG, Fully Insulated		2
11	D11543 Handle Brace, Left		1
12	H03545 Cover, Serial # Label		1
13	H10976-1 Label, UL STD 561-507		1
14	H00565-5 Label, Serial #, Standard		1
15	C11568 Hex Bolt, .31- 18 X 2.5 in		4
16	D11526 Frame, Motor, Black		1
17	D11563 Axle, Handle		1
18	K00674 Bushing, .50 in, Nylon		4
19	C00261 Nut, .25-20, Hex		6
20	D11542 Tension Adjustment Bracket		2
21	C00233 Washer, Flat, .25 in		2
22	C00319 Hex Tap Bolt, 1-4 X 20 X 3.5 in		2
23	D11544 Handle Brace, Right		1
24	C00252 Washer, .375 in, Flat		6
25	C11569 Hex Tap Bolt, 3-8 X 1.25 in		4
26	K11561 Spacer, .25 lg, Nylon, Natural		14
27	C11559 Washer, .515 X .875 X .032		12
28	G11943 Wheel, 5 in Saturn		4
29	C02305 Cap Nut, .5in Push-on		4
30	C11558 Locknut, .375-16		2
31	D11562 Axle, Wheel		1
32	C11555 Key, Motor, .187 in		2
33	D11532 Pulley		1
34	C11567 Set Screw, .312 in		3
35	K00662-50 Spacer, .5 in		2
36	C00250 Lockwasher, .375, Split		5
37	C11571 Hex Tap Bolt, 3-8 X .75 in		3
38	D11535 Washer, 1.75 in, Steel		1
39	E11478 Bumper, 20 in Floor Machine		1
40	F11988 Pad, Hi Speed, 20 in		1
41	2004BR Pad holder, 20 in, High Speed		1
42	C00262 Nut, .31-18, Hex		4
43	C00251 Lockwasher, .31, Split		4
44	D11565 Bearing Plate, Lower		1
45	D11486-SS Brush Cover, 20 in, Stainless	D11486B BRUSH COVER	1
46	K11521 Spacer, Base, Floor Machine		4
47	G11531 Bearing		2
48	D11533 Pulley, 3.125 in w- Grooves		1
49	L11530 Belt		1
50	C11556 Wave Washer		2
51	D11534 Shaft, 4.11 in		1
52	D11566 Bearing Plate, Upper		1
53	C11574 Retaining Ring		1
54	D11490C Drip Cover, Chrome	D11490B DRIP COVER, BK	1

BASE ASSEMBLY FOR:
20HS1500-SS
20HS1500-BK

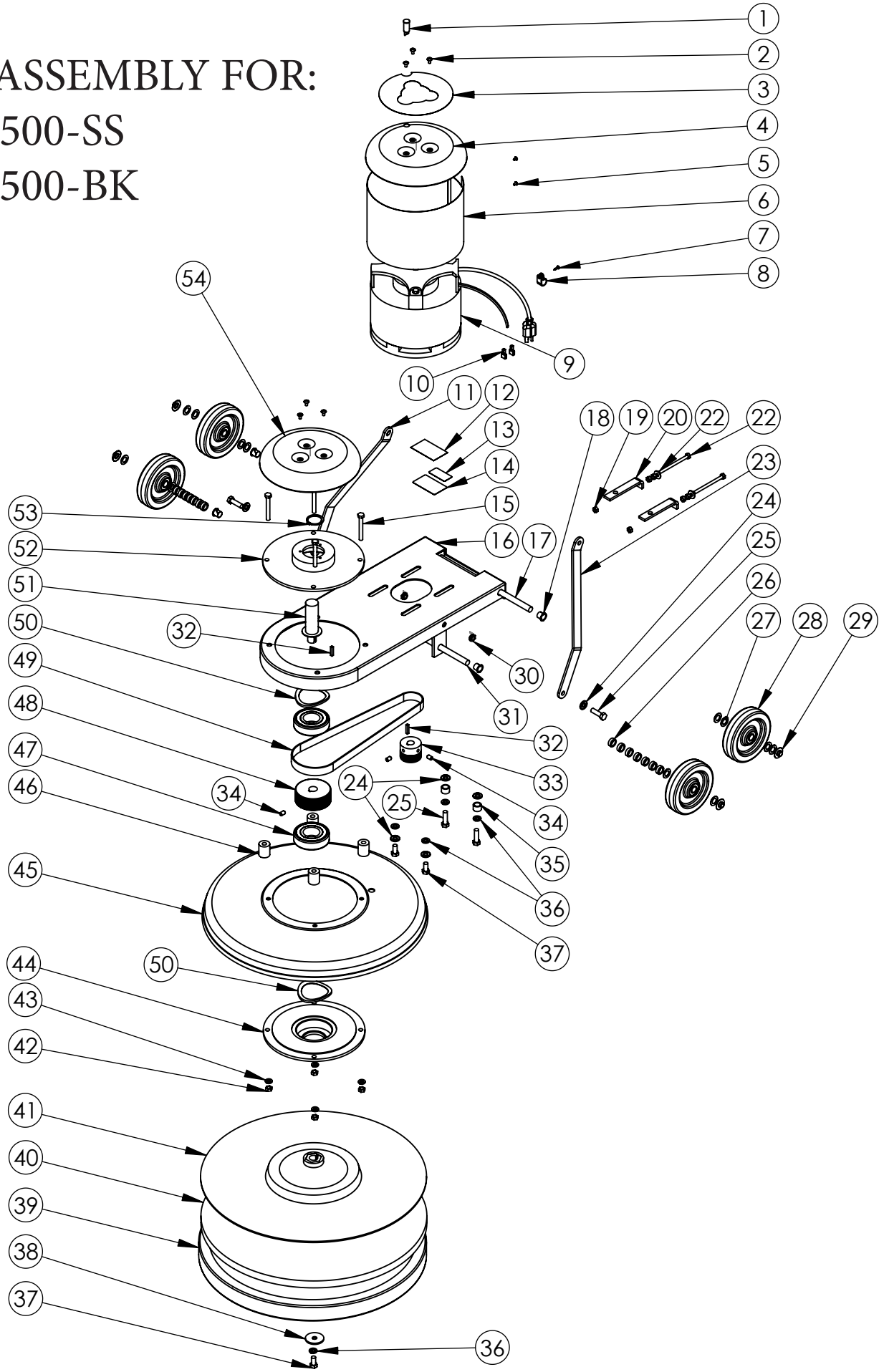

BASE ASSEMBLY FOR:
20HS2000-SS
20HS2000-BK

ITEM NO.	PART NUMBER	FOR BLACK MODEL	QTY.
1	B02196-1 Light, Motor Carbon Brush Wear		1
2	C11916 Screw, 10-32 X .375 Phillips		6
3	H11830 Label, Saturn, Drip Cover		1
4	D11490C-H Drip Cover, Chrome w-Hole for Green Light	D11490B-H BLACK	1
5	C00297 Screw,#8 X .25 in, Pan Head		2
6	D11545 Motor Screen		1
7	C00293 #8 X .5in Pan, Black SMS, Phillips		1
8	B00187 Cable Clamp, Nylon, .43 in.		1
9	G11557 Motor, High Speed 115V, FOR 220V USE G11744		1
10	B00177 Terminal Lug, Female, QD, .25 X .032, 16-14 AWG, Fully Insulated		2
11	D11543 Handle Brace, Left		1
12	H03545 Cover, Serial # Label		1
13	H10976-1 Label, UL STD 561-507		1
14	H00565-5 Label, Serial #, Standard		1
15	C11568 Hex Bolt, .31- 18 X 2.5 in		4
16	D11526 Frame, Motor, Black		1
17	D11563 Axle, Handle		1
18	K00674 Bushing, .50 in, Nylon		4
19	C00261 Nut, .25-20, Hex		6
20	D11542 Tension Adjustment Bracket		2
21	C00233 Washer, Flat, .25 in		2
22	C00319 Hex Tap Bolt, 1-4 X 20 X 3.5 in		2
23	D11544 Handle Brace, Right		1
24	C00252 Washer, .375 in, Flat		6
25	C11569 Hex Tap Bolt, 3-8 X 1.25 in		4
26	K11561 Spacer, .25 lg, Nylon, Natural		14
27	C11559 Washer, .515 X .875 X .032		12
28	G11943 Wheel, 5 in Saturn		4
29	C02305 Cap Nut, .5in Push-on		4
30	C11558 Locknut, .375-16		2
31	D11562 Axle, Wheel		1
32	C11555 Key, Motor, .187 in		2
33	D11532 Pulley		1
34	C11567 Set Screw, .312 in		3
35	K00662-50 Spacer, .5 in		2
36	C00250 Lockwasher, .375, Split		5
37	C11571 Hex Tap Bolt, 3-8 X .75 in		3
38	D11535 Washer, 1.75 in, Steel		1
39	E11478 Bumper, 20 in Floor Machine		1
40	F11988 Pad, Hi Speed, 20 in		1
41	2004BR Pad holder, 20 in, High Speed		1
42	C00262 Nut, .31-18, Hex		4
43	C00251 Lockwasher, .31, Split		4
44	D11565 Bearing Plate, Lower		1
45	D11486-SS Brush Cover, 20 in, Stainless	D11486B BRUSH COVER	1
46	K11521 Spacer, Base, Floor Machine		4
47	G11531 Bearing		2
48	D11533 Pulley, 3.125 in w- Grooves		1
49	L11530 Belt		1
50	C11556 Wave Washer		2
51	D11534 Shaft, 4.11 in		1
52	D11566 Bearing Plate, Upper		1
53	C11574 Retaining Ring		1
54	D11490C Drip Cover, Chrome	D11490B DRIP COVER, BK	1
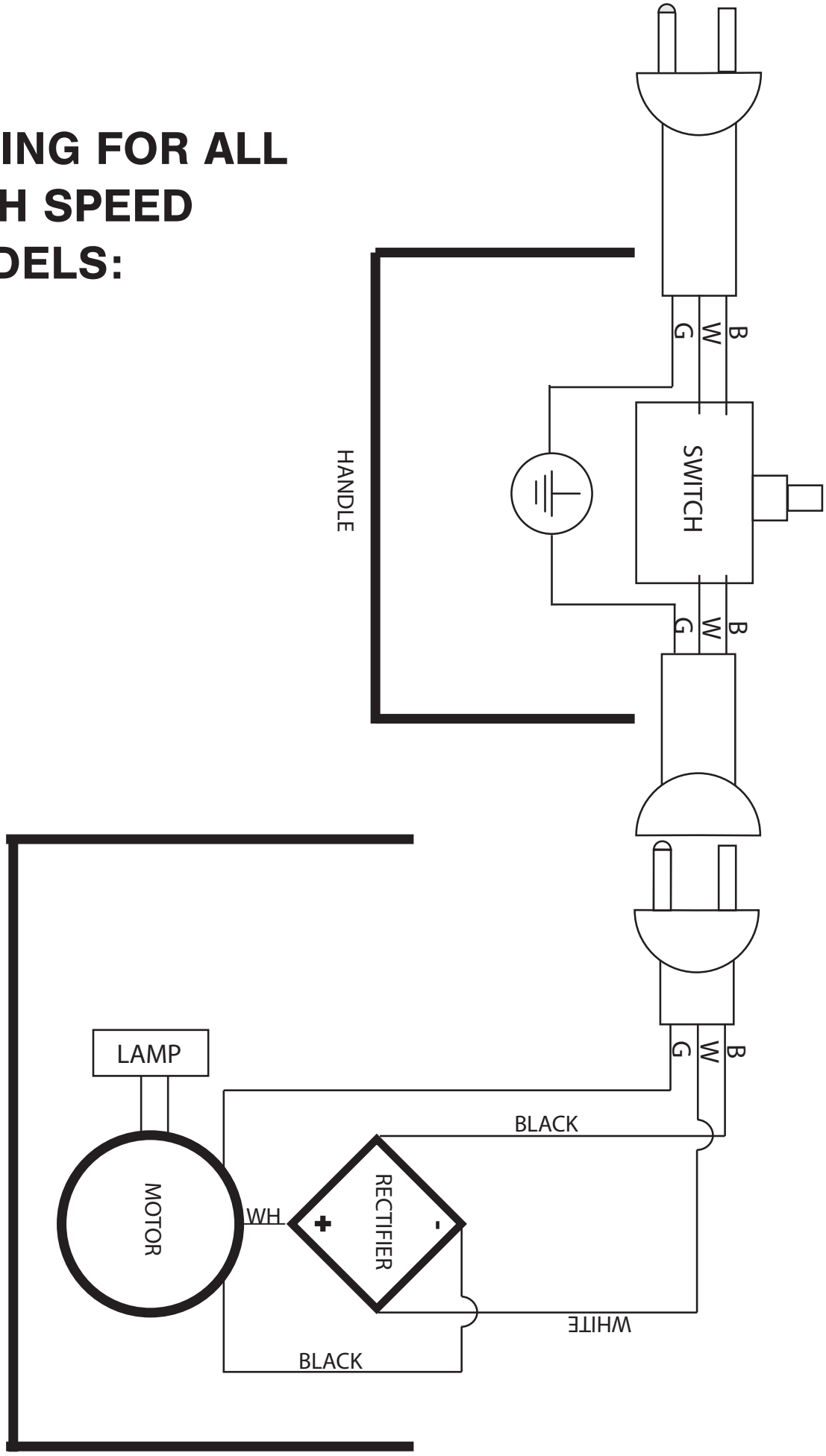
WIRING FOR ALL HIGH SPEED MODELS: