Electronic Service Manuals

This electronic document is provided as a service to our customers. We do not create the contents of the information contained in this document. Should you have detailed questions pertaining to the information contained in this document, you may contact Michco, or the manufacturer which provided the original information in this electronic deliverable. Michco's only part in this electronic deliverable was the electronic assembly process. By providing this manual on line we are not guaranteeing parts availability.

You may contact Michco through the following methods:
Phone (517) 484-9312 or (800) 331-3339
2011 N. High St. -- Lansing, Michigan -- 48906
Fax: (517) 484-9836
Email: CustServe@Michco.com
Web site: www.Michco.Com
Parts Web site: www.FloorMachineParts.Com

Order Parts on Line at:
www.FloorMachineParts.Com

Directly to Parts & Service:
By Email: **Shop@Michco.com**
By Fax: (517) 702-2041
By Voice: Use numbers above.

Serving the Cleaning Industry Since 1922

Notice: All copyrighted material remains property of original owners, all trademarks are property of respective owners. Manuals are subject to Manufacturer's reproduction limitations. Originals or reproductions were provided by manufacturers through a request. We make no warranty as to the correctness of information provided in this document and you assume all risk. By placing these manuals on line we are not declaring our corporation to be an manufacturer authorized dealer or provider, please check our web site for authorized manufacturers we represent.

NOBLES INDUSTRIES, INC.

645 E. Seventh St., St. Paul, Minnesota 55106 — (612) 771-5581
Telex No. 29-7403

FORM 327-11791
EFFECTIVE NOVEMBER 1, 1979
REVISED FEBRUARY 16, 1981
E.E.O. EMPLOYER M/F

PARTS BREAKDOWN
MODEL 518
ASSY. NO. D21502

Assy No.	Part No.	Per Assy	Description
1	B14933	1	Assy — Wand (Includes 2.3)
2	B14936	1	Tube, Wand
3	K14934	1	Bushing
4	B22504	1	Assy — 25' Hose
7	C15748	1	Assy — Handle, Non-Remote (Includes 8,9)
8	K15499	2	Bushing
9	K15749	1	Control Handle, Non Remote
10	B21489	1	Assy — Handle & Weld Screws
11	C21496	1	Assy — Pump & Motor (Includes 12 - 21)
12	K14863	1	Adapter
13	K14885	1	Elbow, Street
14	K14900	1	Washer, Filter
15	K15235	1	Nipple
16	K15487	2	Socket, Quick Coupler
17	K15503	1	Adapter, G.H.T.
18	K15506	1	Nipple
19	K21493	1	Pump
20	K21979	1	Siphon Injector
21	K21494	1	Motor, 1/2 H.P.
22	C21681	1	Assy — Case & Louvers (Includes 23 -25)
23	C21676	2	Louver
24	K2871-6	14	Washer, Flat
25	K22358	14	Rivet
26	A22007	1	Assy — Flowmeter & Decal (Includes 27)
27	A22006	1	Decal
28	A20816	2	Decal, Logo
29	A21492	2	Plate Bearing
30	B21503	1	Cord, Power
31	A21527	1	Plate
32	B22004	2	Decal, Speed Spray II
33	K2871-10	2	Washer, Flat
34	K2964-10	2	Lockwasher
35	K2964-14	2	Lockwasher
36	K4770-8	2	Screw, Pan Hd.
37	K5035	2	Nut, Hex
38	K5619	1	Plate, Indicator
39	K14501	2	Nut, Hex
40	K14864	1	Grommet
41	K14865	1	Strain Reliever
42	K14880-5	2	Flat Washer
43	K14940-15	1	Tubing, Vinyl
44	K14940-60	1	Tubing, Vinyl
45	K14999	1	Plug, Quick Coupler
46	K15002	6	Mount, Shock
47	K15478	1	Grommet
48	K15553	1	Screen, Bell
49	K15490	1	Plug, Quick Coupler
50	K15565	1	Valve, Shut-Off
51	K16440	1	Seal, Switch
52	K21497	1	Strain Reliever
53	K21528	6	Lock Nut
54	K21682	1	Switch, Toggle
55	K21686	1	Nozzle, Hi-Lo
56	K21978	3	Clip, Tubing
57	K22819	2	Nut, Self Threading

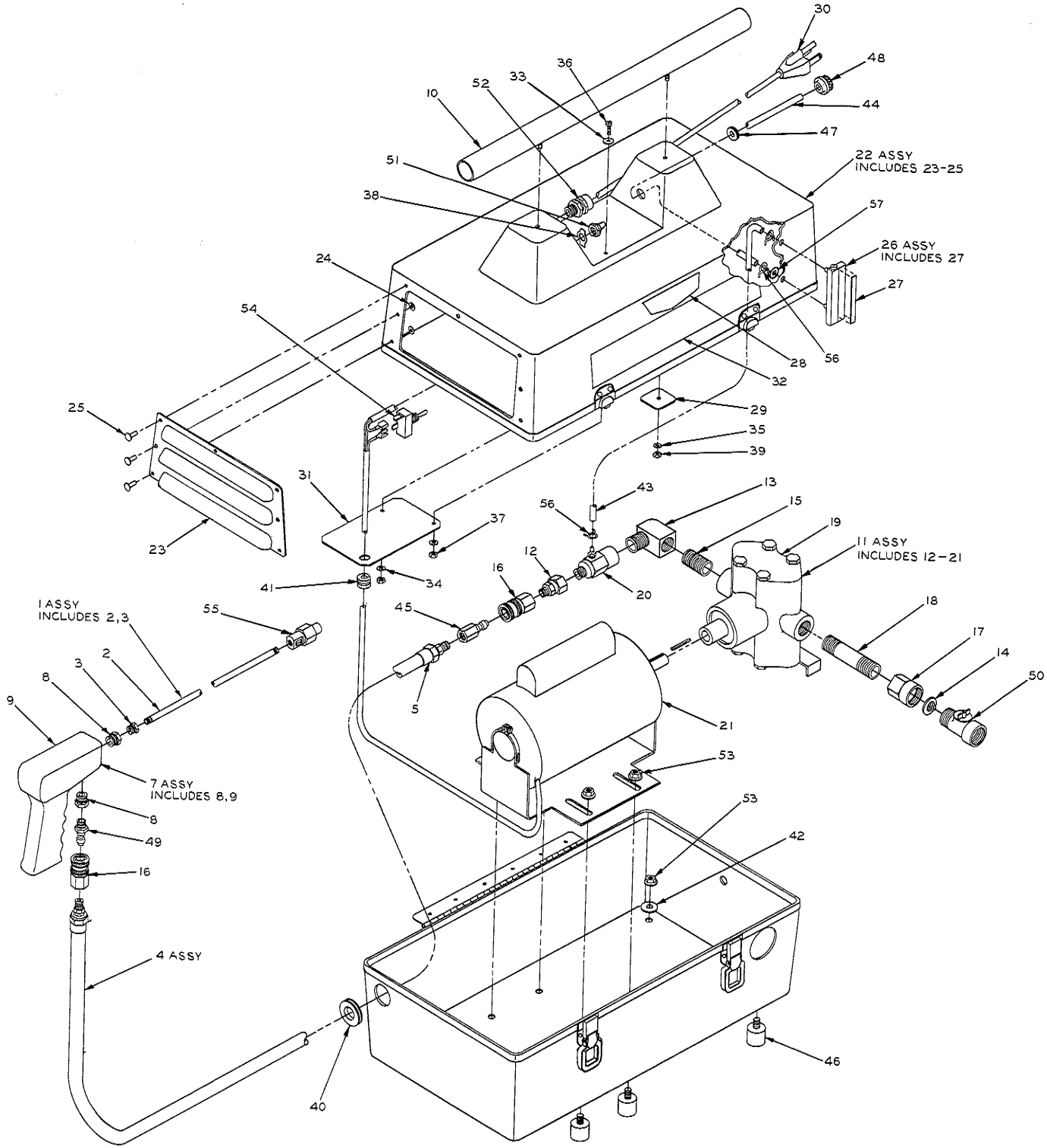
30
48
44
47
22 ASSY
INCLUDES 23-25
57
26 ASSY
INCLUDES 27
27
56
28
32
29
35
39
10
52
33
36
51
38
24
54
25
23
31
37
34
41
43
56
13
15
19
11 ASSY
INCLUDES 12-21
12
16
20
45
5
55
1 ASSY
INCLUDES 2,3
2
3
8
9
7 ASSY
INCLUDES 8,9
8
49
16
4 ASSY
40
21
53
53
42
46
18
17
14
50